BEAM1

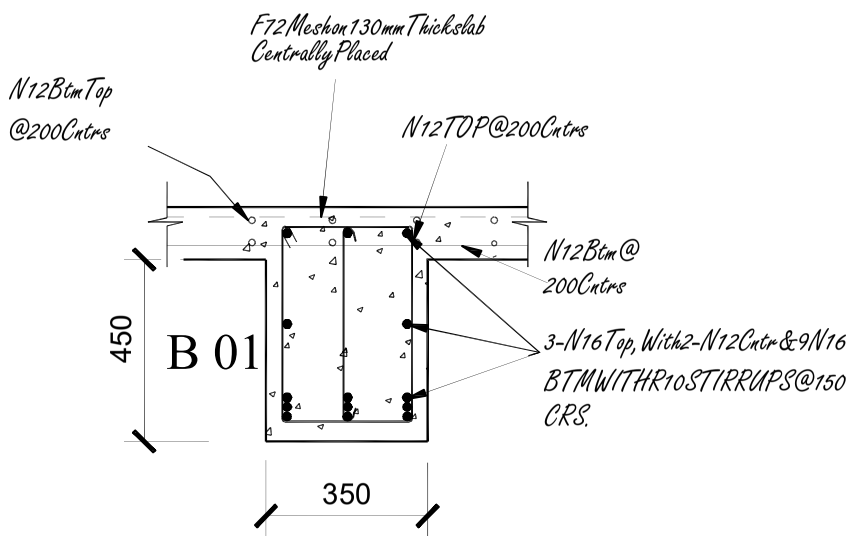


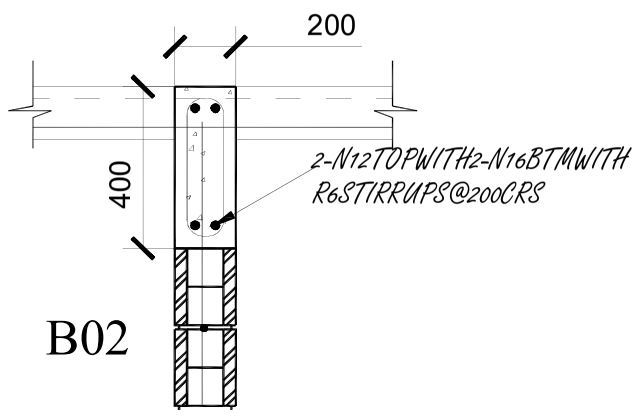


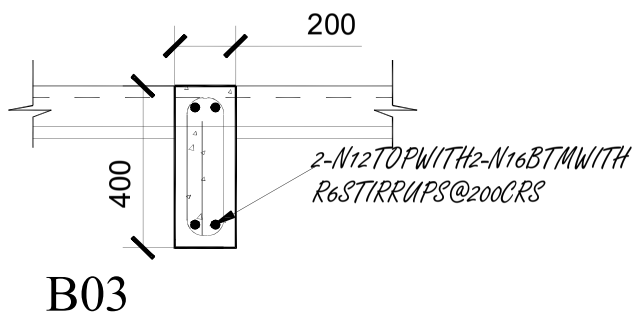


D13 BEAM
DETAIL SCALE:NTS

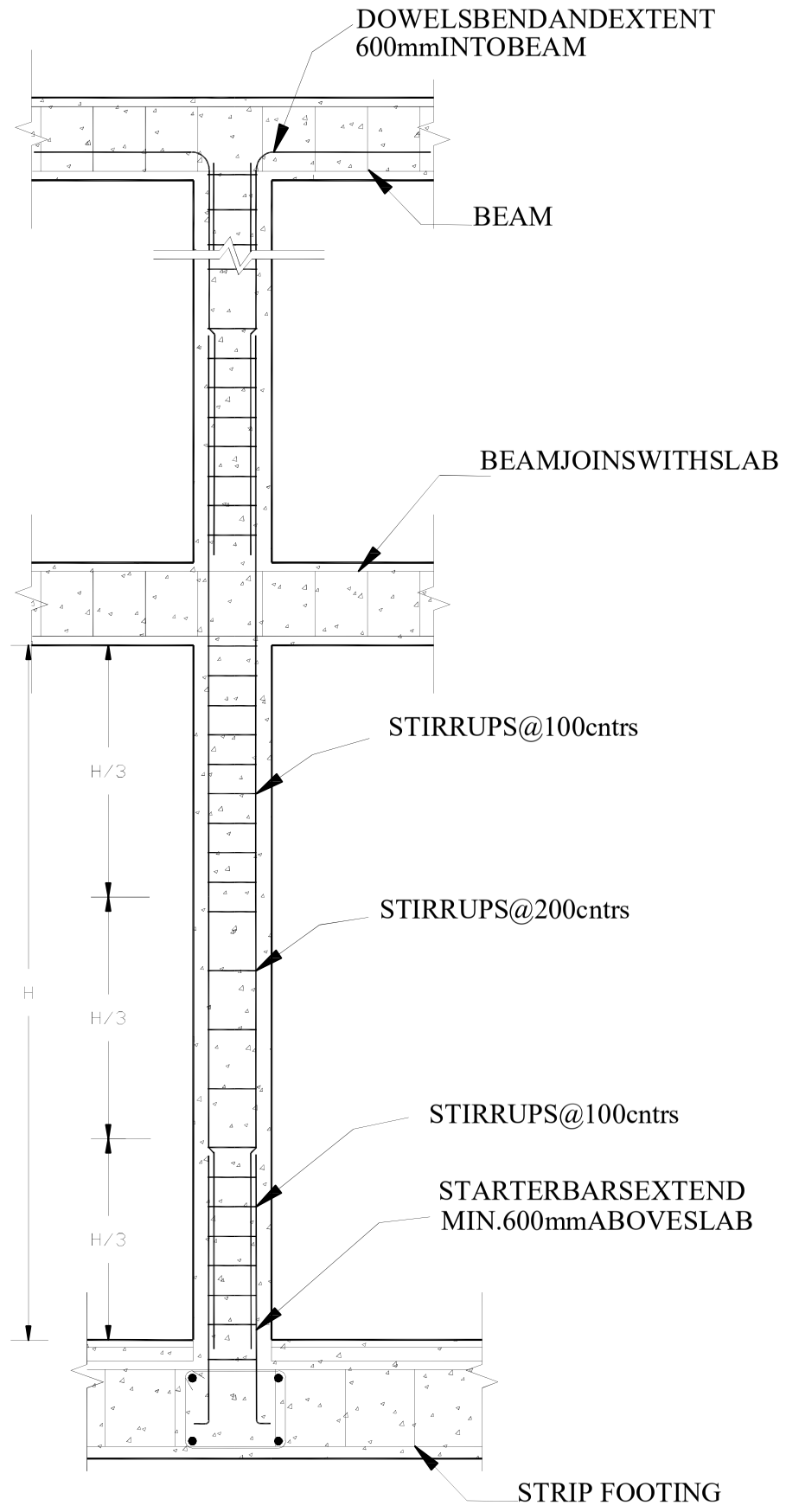


D11 TYPICAL COLUMN BEAM
DETAIL SCALE:NTS

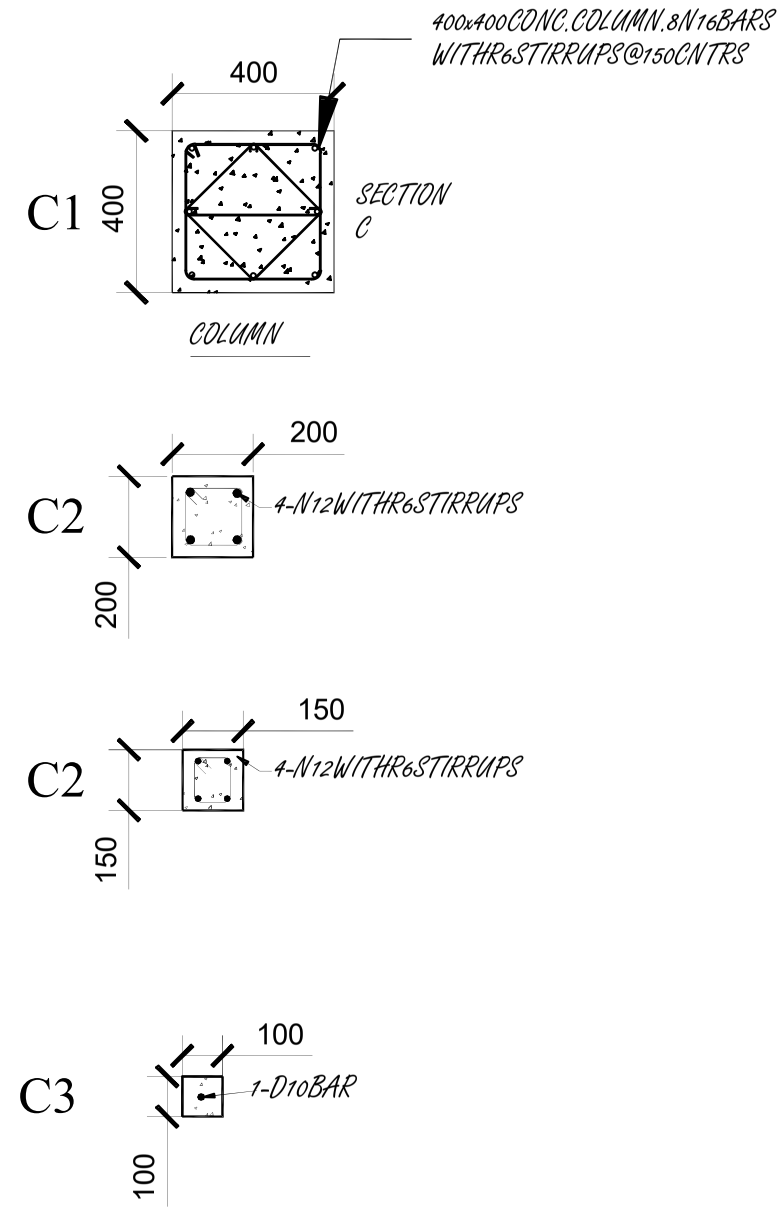


D12 COLUMN
DETAIL SCALE:NTS

| | | | | |
|---|---|---|---|---|
| DEPARTMENT OF ENVIRONMENT AND CONSERVATION MINISTRY OF CLIMATE CHANGE | | REVISION | DATE: | NOTES: |
| DESIGNEDBY: | IAN IERCET | | | |
| DRAWNBY: | I IERCET | | | |
| CHECKED BY: | | | | |
| CLIENTNAME: | MoCC - Department of Environment | | | |
| DATE: | SEPTEMBER 2023 | | | |

PROJECT: ENVIRONMENT DEPARTMENT NEW OFFICE PROJECT

DRAWINGTITLE: COLUMN AND BEAM DETAILS

| | | | |
|---|---|---|---|
| DRAWINGNo: | E N V | 05 | SCALEA3: |
| PROJECTION: | NA. | | NTS |